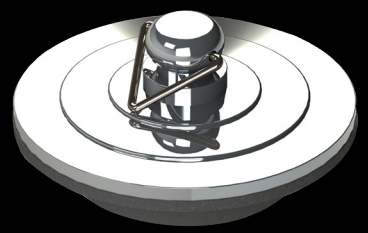

WaterMark

50mm DELUXE PLUG

CODE	OUTLET SIZE	FINISH	CTN QTY
29104.01	50mm	Chrome	100

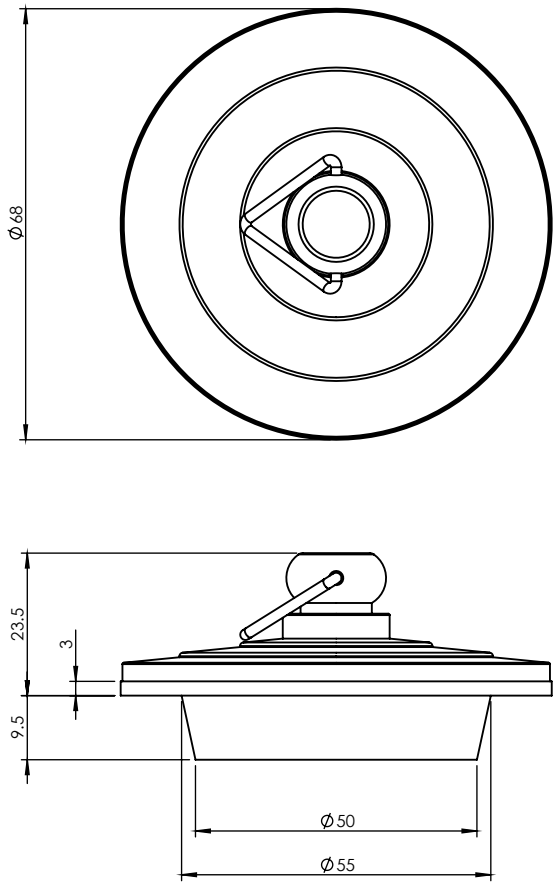

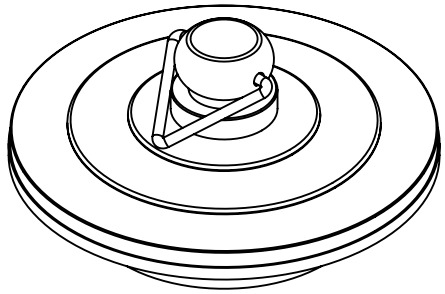

ART INTERNATIONAL
PLUMBING & BATHROOMWARE

134 Gilba Road Girraween, NSW 2145
P: 02 9896 7760 | F: 02 9636 2498 | sales@artinternational.com.au
www.artaust.com.au | www.artnz.co.nz

ART PLUMBING PRODUCTS
Innovative Plumbing Fittings

BOUNTY BATHROOMWARE
Designer Bathroom Fittings