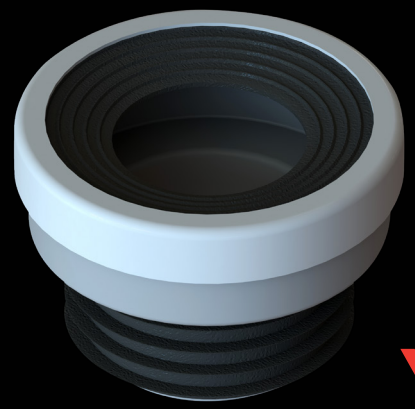

WaterMark

100mm PAN COLLAR CONCENTRIC W/ FLEXI FIN CONNECTION
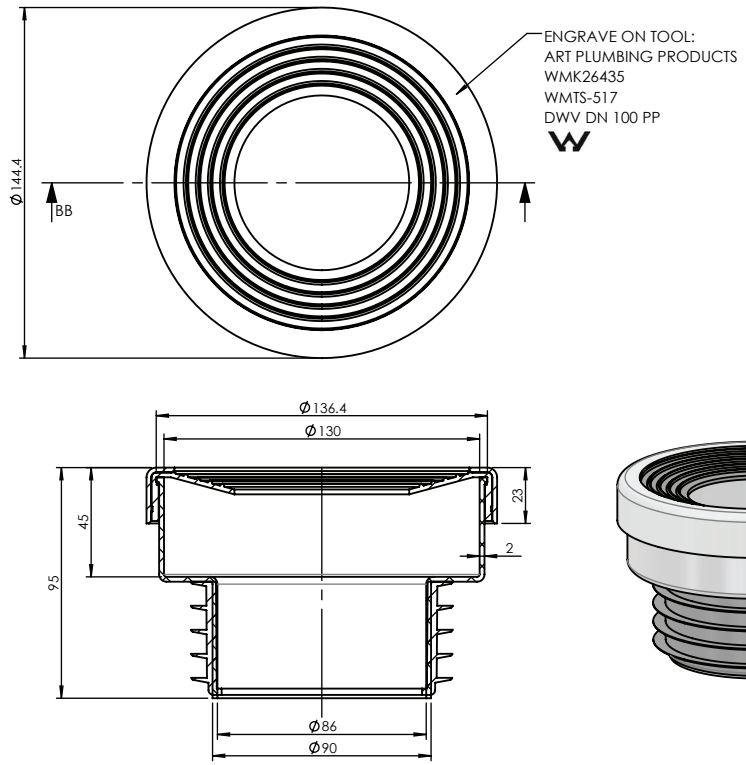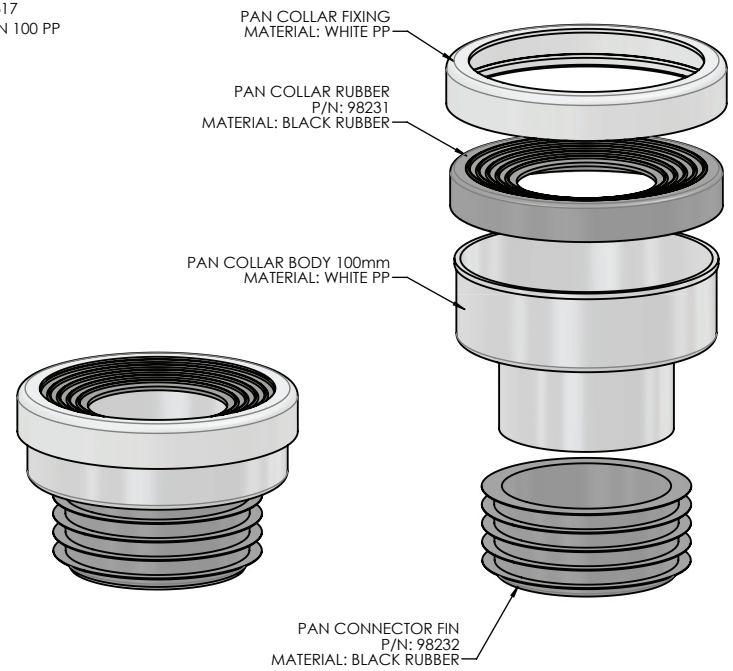
CODE	OUTLET SIZE	FINISH	CTN QTY
31905	100mm	N/A	48